LAWRENCE
LIVERMORE
NATIONAL
LABORATORY

LLNL-JRNL-749681

Optimally Allocating Energy Storage for Active Distribution Networks to Reduce the Risk under N-1 Contingencies

T Ding, C Li, X Liu, H Xie, Y Tang, C Huang

March 2021

IEEE Systems Journal

Optimally Allocating Energy Storage for Active Distribution Networks to Reduce the Risk Under N-1 Contingencies

Tao Ding, *Senior Member, IEEE*, Chunzhu Li, *Student Member, IEEE*, Xiyuan Liu, *Student Member, IEEE*, Haipeng Xie, *Student Member, IEEE*, Yufei Tang, *Member, IEEE*, and Can Huang, *Senior Member, IEEE*

***Abstract*—In distribution networks, N-1 contingencies are the main threats to load loss. To reduce the risk from power system threats, the energy storage (ES) can be applied to mitigate the load loss after the N-1 contingencies. However, for a given number of ESs, different location of ESs may have different mitigation results. This article first proposes a bi-level optimization model to find an optimal allocation of ESs for distribution networks, where the upper-level model is to minimize the total risk of all N-1 contingencies and the lower-level model is to compute the load loss for each contingency. Then, the proposed bilevel model is equivalently transformed into a single-level model using Karush–Kuhn–Tucker conditions. The simulation results on two test systems show the effectiveness of the proposed model.**

***Index Terms*—Active distribution network, bilevel optimization, energy storage (ES), N-1 contingency, risk assessment.**

NOMENCLATURE

Indices and Sets	
l	Index of breakers.
k	Index of normal breakers under N-1 contingency.
i	Index of ESs.
j	Index of buses.
Θ	System state space.
$\Lambda(\xi_l)$	The isolated zone set under the contingency ξ_l.
$\mathbf{Y}$	Decision set.
$\Xi(\xi_l)$	Feasible region of the system under the contingency ξ_l.
N_c	The number of breakers.
N_b	The number of buses.
Parameters	
p_l	Forced outage rate of the lth breaker.
x_l	State of the lth breaker.
$\boldsymbol{x} = (x_1, \ldots, x_{Nc})$	System state with each breaker state.
ξ_l	One N-1 contingency with the l-th breaker being out of service.
$P^c{}_{g,i}$	The capacity of ith ES.
D_j	The initial load demand at bus j.
$P_{g,j}^{\max}$	The capacity of ES at but j.
Variables and Functions	
risk	Risk of the whole system.
Severity $(\boldsymbol{x})$	Severity of the system under the system state $\boldsymbol{x}$.
$y_{i,j}$	The location choice of i-th ES at bus j.
$\Delta P_{j,l}$	Load shedding at bus j under the contingency ξ_l.
$P_{g,j,l}$	Redispatched ES at bus j under the contingency ξ_l.

Manuscript received September 17, 2017; revised January 24, 2018 and April 12, 2018; accepted April 16, 2018. This work was supported in part by the National Natural Science Foundation of China under Grant 51977166, in part by the China Postdoctoral Science Foundation under Grant 2017T100748, in part by the Natural Science Foundation of Shaanxi Province under Grant 2020KW-022, and in part by the Science and Technological Program of State Grid Shaanxi Electric Power Corporation under Grant SGSN0000TKJS2001711. *(Corresponding author: Tao Ding.)*

Tao Ding, Chunzhu Li, Xiyuan Liu, and Haipeng Xie are with the Department of Electrical Engineering, Xi'an Jiaotong University, Xi'an 710049, China (e-mail: tding15@mail.xjtu.edu.cn; lichunzhu@stu.xjtu.edu.cn; catherine.liu@stu.xjtu.edu.cn; xiehaipeng@stu.xjtu.edu.cn).

Yufei Tang is with the Department of Electrical Engineering and Computer Science, Florida Atlantic University, Boca Raton, FL 33431 USA (e-mail: tangy@fau.edu).

Can Huang is with the Department of Electrical Engineering and Computer Science, Knoxville, TN 37996 USA (e-mail: can7huang@gmail.com).

Digital Object Identifier 10.1109/JSYST.2021.3058349

I. INTRODUCTION

ENERGY storage (ES), served as a kind of distributed energy resources, has witnessed a rapid development and evolution in the past decade, resulting from the bloom of renewable energies and smart grids [1]. ESs provide a wide range of technical benefits for active distribution networks [2], such as reducing operation costs [3], [4], increasing system reliability [5]–[7], promoting renewable energy penetration [8], [9], improving voltage profile [10], and improving power quality [11]. ESs make a great contribution to integrating and utilizing renewable resources in an economical way, and furthermore facilitate the exploitation of clean energy and reduce the curtailment. Thereby, ESs have become an essential part of active distribution networks and microgrids, playing an important role in planning, scheduling, and operation of active distribution systems.

The impacts of ESs and DGs on distribution networks are studied in terms of technique and economy in [12], in which ESs showed positive impacts on transient stability. In [13],

This work was supported by the U.S. Department of Energy's Office of Electricity and performed under the auspices of the U.S. Department of Energy by Lawrence Livermore National Laboratory under Contract DEAC52- 7NA27344 with IM release number LLNL-JRNL-749681.

small-scale ES is modeled cooperating with renewable energy sources in system-level, and the model is then introduced into the market-based operation. Within microgrids, the benefits of battery ESs are investigated to energize critical load, combined with wind turbines in [14]. Based on game theory, an operation decision algorithm of ESs in a household scale is proposed to maximize the profits of the grid and the customers in [15]. A frequency control scheme is developed in [16] for supercapacitors, based on the supervisory adaptive predictive control. Considering the uncertainties of fault clearing time, Xu *et al*. proposed an ES controller synthesis method [17].

Along with the advance of ES techniques, the optimal sizing and sitting of ESs draw attentions from both research community and industrial circles. The integration of ESs brings various benefits and some challenges at the same time to active distribution networks. Each power market participant values different benefits, and even the same participant attaches distinguishing importance to these factors based on different conditions. Thereby, the allocation of ESs is usually devised or optimized for distinct aims. As Zidar *et al*. classified, existing methods to allocate ESs can be divided into three categories according to the role of ESs owners in the power market, namely generation side, system operators, and consumers [18]. In these methods and models, common concerns comprised minimizing operation cost or maximizing profit [19]–[22], maximizing the penetration of renewable energy [23], [24], improving voltage profile [25]–[27], promoting peak-shaving or voltage stability [28]–[32], etc. Moreover, reference [33] and [34] adopted multiobjective optimization models by combining of several above objective values. Although objectives and constraints varied, the focus is on economic and power quality. However, ESs, as distributed type of power sources, can reduce system risk and boost the reliability of distribution networks by working as backups during contingencies or islanding. In order to fully exploit the potential of ESs, the reliability should be valued in the planning, especially concerning importance consumers.

Originally, Mitra proposed an analytical approach to size ES unit to meet a specified reliability level [35], whereas this method was only applicable to single power supply. Aiming to alleviate the shortage of transmission, Zhang *et al*. proposed an on-site ES sizing method, whereas only an upper bound of ES volume was determined based on a probabilistic reliability evaluation approach [36]. In the test, however, the upper bound appeared too large to meet a real case, and no tradeoff approach was further proposed to obtain a practical ES capacity and volume. These studies provided effective methods to allocate ESs to power sources. However, these methods are not applicable to distribution networks with complex topologies and distributed generation. Based on Monte Carlo simulation, Mitra *et al*. presented a reliability evaluation method and further applied it to determine the size of ESs in microgrids [37]. The reliability can be assessed subtly within the method, but the process of assessment is time-consuming and not flexible enough to include more practical constraints. Bahramirad *et al*. built an optimal model to address the optimal sizing of ESs in microgrids, in which case reliability criterion was regarded as analytical constraints, with the investment and operating cost constituting the objective [38]. Herein, reliability criterion is quantified by the reliability index named LOLE [39]. In the model, however, networks were out of consideration.

In above studies, reliability was only regarded as a constraint, such that the benefits on reliability would be underestimated. Meanwhile, enhancing reliability is one of the prime purposes on many occasions. Therefore, reliability-oriented or reliability-centered methods also deserve thorough investigation just as other objectives. Moreover, the focus of above studies is on the total size of ESs, while the location also influences the benefits of ESs. However, little research has been conducted on how to reach the optimal reliability by appropriately allocating ESs within specified investment. Hence, in this article, we aim to develop an analytical method to address this issue, i.e., how to place ESs as backup to reduce the risk of distribution networks in the most appropriate way.

The primary issue of reliability-oriented allocation is the evaluation of reliability. Reliability evaluation of distribution networks containing ESs is never easy nor straightforward. Monte Carlo method is widely used for reliability evaluation [40]–[42], but it is time-consuming and has accuracy issue. Worse more, the reliability index cannot be formulated analytically in the allocation model if Monte Carlo method is applied, while the allocation model can only be solved by heuristic methods with confining efficiency and convergence. Analytical evaluation methods seem to be attractive options, but they are either difficult to take networks into account or too complex to be formulated entirely with a couple of constraints into optimization models. Hence, the existing reliability evaluation methods almost lead to nonanalytical allocation algorithms. For distribution networks, most of the outages have been resulted from N-1 contingencies [43]. Motivated by the engineering fact, this article mainly focused on N-1 contingencies to estimate the risk of distribution networks. We first propose a proper analytical risk assessment algorithm and then embedded it into an analytical reliability-oriented allocation method. The method utilizes optimization techniques to explore the system risk, which do not need to enumerate all the system states, so that the efficiency can be greatly improved.

The main contributions can be summarized as follows.

1) A bilevel optimization problem is set up to find an optimal ES allocation for active distribution networks to reduce the risk under N-1 contingencies.
2) The proposed bilevel optimization model is mathematical reformulated as a single-level mixed integer linear programming (MILP) using the Karush–Kuhn–Tucker (KKT) condition of linear programming in the lower-level model.

This article is organized as follows. In Section II, the mathematical model is proposed to address the optimal allocation of ESs in active distribution networks. Section III presents the mathematical reformulation to solve the proposed bilevel optimization model. Furthermore, the simulation studies on two test systems are shown in Section IV. Section V concludes this article.

TABLE I
CONTINGENCY ANALYSIS IN PRACTICAL 110 KV DISTRIBUTION NETWORKS IN SX PROVINCE OF CHINA

	2014			2015			2016		
	N-1	N-2	>N-3	N-1	N-2	>N-3	N-1	N-2	>N-3
BJ	8	0	0	5	0	0	9	0	0
HZ	4	0	0	7	0	0	4	0	0
SL	7	0	0	10	1	0	5	1	0
TC	5	0	0	3	0	0	1	0	0
WN	18	0	0	18	0	0	15	0	0
XA	15	0	0	10	0	0	9	0	0
XY	15	0	0	8	0	0	2	0	0
YA	13	0	0	7	0	0	15	1	0
AK	0	0	0	7	0	0	4	1	0
Total	N-1			N-2			N-3		
	224			4			0		

II. MODELING FOR ACTIVE DISTRIBUTION NETWORK BY ALLOCATING ESS

In practical distribution system operation, the N-1 contingencies are the most common outages, since the probability of the multiple contingencies is very small, especially under the development of smart distribution network techniques. An example of nine real-world distribution networks in SX province of China is shown in Table I, where there are no multiple contingencies expect for only few N-2 contingencies over three years. The probability of N-1 contingencies is about 98.25%. Therefore, we only take the N-1 contingencies into account in this article to install ESs for a distribution network.

The reliability evaluation and risk assessment under N-1 contingencies for a distribution network can be analyzed using analytic method, where all the contingencies are screened and the risk index is computed for each individual contingency. Moreover, each N-1 contingency will split the network into two parts due to the radial structure and we define the isolated load buses as those that are not connected to the root bus. Obviously, the loads in the isolated part will be lost. However, the ESs that are interconnected to a distribution network will be able to provide the power supply for the isolated part during the contingency. Notably, the location of ESs is closely related to the reliability index. If there is no ES in the isolated part, all the loads will be lost; if there are ESs in the isolated part, the ES should be operated to meet the load requirement with the aim of minimal load loss.

We consider a two-state model for each breaker, such that

$$x_l = \begin{cases} 0 \text{ if Breaker l is a failure} \\ 1 \text{ otherwise.} \end{cases} \tag{1}$$

Let the forced outage rate (F.O.R.) of the *l*th breaker be p_l (i.e., the probability of $x_l = 0$), which is a prior parameter that can be obtained from the power system planning department of transmission system operators (TSOs) [44].

Furthermore, assume that there are N_c breakers in the given active distribution network, each contingency of power system will follow a Bernoulli distribution, such that $\prod_{l=1}^{N_c}(p_l(1-x_l)+(1-p_l)x_l)$.

The risk of each contingency can be defined as the multiplication of the probability and the load loss, which gives

$$\text{risk} = \sum_{\boldsymbol{x}\in\Theta}\left\{\text{severity}\left(\boldsymbol{x}\right)\prod_{l=1}^{N_c}\left(p_l\left(1-x_l\right)+\left(1-p_l\right)x_l\right)\right\}. \tag{2}$$

Since we only consider the N-1 contingencies in this article, the total number of configurations is N_c and the set Θ can be explicitly written as

$$\Theta = \left\{(x_1,\ldots,x_{N_c})\,\middle|\,\sum_{l=1}^{N_c}x_l = 1, x_l\in\{0,1\}\right\}. \tag{3}$$

Furthermore, for the N-1 contingency with the breaker l being out of service, we have the state $\boldsymbol{\xi}_l = (x_1,\ldots,x_{l-1},x_l,x_{l+1},\ldots,x_{N_c}) = (1,\ldots,1,0,1,\ldots,1)$and the probability $\frac{p_l}{1-p_l}\prod_{k=1}^{N_c}(1-p_k)$. Moreover, each system state (N-1 contingency) will lead to different severities (a.k.a., the load loss). For the *l*th breaker out of service, the severity is obtained from the system operator's redispatch decision and performed in response to the realization of a contingency, with the aim of minimizing the total load loss, such that

$$\text{severity}\left(\boldsymbol{\xi}_l\right) = \min_{(\boldsymbol{P}_{g,l},\Delta\boldsymbol{P}_l)\in\Xi(\boldsymbol{\xi}_l)}\sum_{j\in\boldsymbol{\Lambda}(\boldsymbol{\xi}_l)}\Delta P_{j,l} \tag{4a}$$

where

$$\Xi\left(\boldsymbol{\xi}_l\right) = \Big\{\left(\boldsymbol{P}_{g,l},\Delta\boldsymbol{P}_l\right)|:$$

$$\sum_{j\in\boldsymbol{\Lambda}(\boldsymbol{\xi}_l)}\left(D_j-\Delta P_{j,l}-P_{g,j,l}\right)=0 \tag{4b}$$

$$0\le P_{g,j,l}\le P_{g,j}^{\max},\ j\in\boldsymbol{\Lambda}\left(\boldsymbol{\xi}_l\right) \tag{4c}$$

$$0\le\Delta P_{j,l}\le D_j, j\in\boldsymbol{\Lambda}\left(\boldsymbol{\xi}_l\right)\Big\} \tag{4d}$$

Here, constraint (4b) denotes the power balance after *l*th breaker is out of service; constraint (4c) and (4d) refer to the bound restriction of ESs and load shedding.

Then, the whole system risk under N-1 contingencies can be formulated as the summation of the risk under each individual N-1 contingency, yielding

$$\text{risk} = \sum_{l=1}^{N_c}\left\{\text{severity}\left(\boldsymbol{\xi}_l\right)\frac{p_l}{1-p_l}\prod_{k=1}^{N_c}\left(1-p_k\right)\right\}. \tag{5a}$$

Take three breakers as shown in Fig. 1 for instance and the F.O.R. of each breaker is p_1, p_2, and p_3, respectively. The set Θ contains three system states under N-1 contingencies, i.e., ξ_1 = (01,1), ξ_2 = (10,1), and ξ_3 = (11,0). Correspondingly, the probability should be p_1(1-p_2)(1-p_3), (1-p_1)p_2(1-p_3) and (1-p_1)(1-p_2)p_3. For the three contingencies, we have $\boldsymbol{\Lambda}(\boldsymbol{\xi}_1) = \{1,2,3\}$, $\boldsymbol{\Lambda}(\boldsymbol{\xi}_2) = \{2\}$,and $\boldsymbol{\Lambda}(\boldsymbol{\xi}_3) = \{3\}$.

Although the ESs can mitigate the load loss after contingencies, it should be noted that different allocation of ESs for a distribution network may result in different improvement of the system reliability. As a result, for a given number of ESs, the

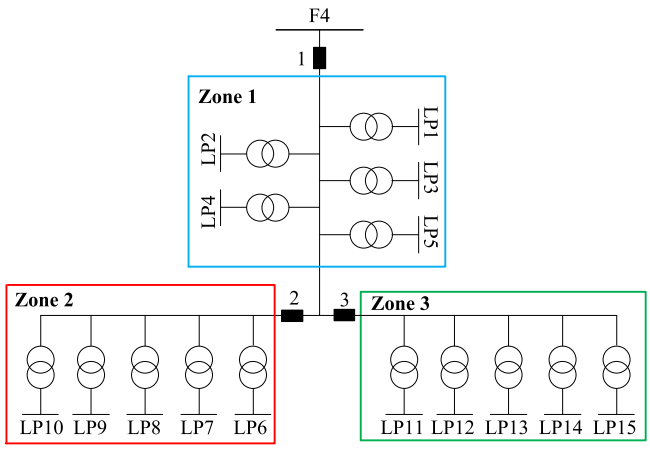

Fig. 1. Simple example for a three-zone test system.

system operator always expects to minimize the whole system risk by optimally allocating these ESs.

Let $\boldsymbol{y}_i$ denote the location choice vector of ith ES and $y_{i,j} = 1$, if ith ES is installed at bus j; otherwise, $y_{i,j} = 0$. As shown in Fig. 1, in order to distribute N_c ESs to N_b buses, there are totally $(N_d)^{N_c}$choices, so the problem of optimally allocating ESs for active distribution network is essentially a combinatorial optimization model. The feasible region of this model can be described as

$$\sum_{j=1}^{N_b} y_{i,j} = 1, i = 1, \ldots, N_c \tag{5b}$$

$$y_{i,j} \in \{0, 1\}, i = 1, \ldots, N_c; j = 1, \ldots, N_b \tag{5c}$$

$$P_{g,j}^{\max} = \sum_{i=1}^{N_c} P_{g,i}^{c} y_{i,j}, j = 1, \ldots, N_b \tag{5d}$$

The constraint (5b) represents a choice constraint, denoting that each ES only can be installed at one bus. Constraint (5c) describes the location choice variables should be binary variables. Constraint (5d) shows that the capacity of ES at each bus is the combination of all ESs multiplying the location choice variables.

Finally, the optimization problem for ES allocation can be cast as a bilevel optimization model in (6), which involves two stages in sequence: 1) upper level: operators make a decision to optimally allocate the ESs to be installed at some buses with the aim of minimizing the system risk; 2) lower level: system operators react to any N-1 contingency by taking corrective actions to minimize the load loss. The upper and lower models are connected by the capacity $\boldsymbol{P}_g^{\max}$, where the upper model determines the location of ES according to the severity from the lower model, which will further determine the capacity of ESs; the lower model computes the system severity by a given capacity of ESs from the upper model.

$$\min_{(\boldsymbol{y}, \boldsymbol{P}_g^{\max}) \in \mathbf{Y}} \sum_{l=1}^{N_c} \left\{ \text{severity}\left(\boldsymbol{\xi}_l\right) \frac{p_l}{1 - p_l} \prod_{i=1}^{N_c} \left(1 - p_i\right) \right\} \tag{6a}$$

$$\text{s.t.} \mathbf{Y} = \left\{ \sum_{j=1}^{N_b} y_{i,j} \leq 1, i = 1, \ldots, N_c \right. \tag{6b}$$

$$y_{i,j} \in \{0, 1\}, i = 1, \ldots, N_c; j = 1 \tag{6c}$$

$$P_{g,j}^{\max} = \sum_{i=1}^{N_c} P_{g,i,j}^{c} y_{i,j}, j = 1, \ldots, N_b \tag{6d}$$

$$\text{severity}\left(\boldsymbol{\xi}_l\right) = \min_{(\boldsymbol{P}_g, \Delta \boldsymbol{P})} \sum_{i \in \boldsymbol{\Lambda}_{\mathbf{n}}(\boldsymbol{\xi}_l)} \Delta P_{i,l}$$

$$\text{s.t.} \ \Xi = \{(\boldsymbol{P}_g, \Delta \boldsymbol{P})| :$$

$$\sum_{j \in \boldsymbol{\Lambda}_{\mathbf{n}}} \left(D_j - \Delta P_{j,l} - P_{g,j,l}\right) = 0 \tag{6e}$$

$$0 \leq P_{g,j,l} \leq P_{g,j}^{\max}, \ j \in \boldsymbol{\Lambda}_{\mathbf{n}}\left(\boldsymbol{\xi}_l\right) \tag{6f}$$

$$\left. 0 \leq \Delta P_{j,l} \leq D_j, j \in \boldsymbol{\Lambda}_{\mathbf{n}}\left(\boldsymbol{\xi}_l\right) \} \right\} \tag{6g}$$

III. Mathematical Reformulation

It can be observed that the proposed model (6) is essentially a bilevel optimization model, where the upper level model is a MILP and the lower level model is a linear programming. Without loss of generality, the original bilevel model (6) can be formulated in a matrix form as

$$\max_{\boldsymbol{x}} \boldsymbol{c}^T \boldsymbol{x} \tag{7a}$$

$$\text{s.t.} \ \boldsymbol{x} \in \Theta \tag{7b}$$

$$\boldsymbol{y} = \arg \min_{\boldsymbol{y}} \boldsymbol{a}^T \boldsymbol{y} \tag{7c}$$

$$\text{s.t.} \ \boldsymbol{A}_{\text{eq}} \boldsymbol{y} = \boldsymbol{b}_{\text{eq}} : \boldsymbol{u}_{\text{eq}} \tag{7d}$$

$$\boldsymbol{A}_{\text{ieq}} \boldsymbol{y} \leq \boldsymbol{b}_{\text{ieq}} : \boldsymbol{u}_{\text{ieq}} \tag{7e}$$

$$\boldsymbol{B}_{\text{eq}} \boldsymbol{y} + \boldsymbol{C}_{\text{eq}} \boldsymbol{x} = \boldsymbol{d}_{\text{eq}} : \boldsymbol{v}_{\text{eq}} \tag{7f}$$

$$\boldsymbol{B}_{\text{ieq}} \boldsymbol{y} + \boldsymbol{C}_{\text{ieq}} \boldsymbol{x} \leq \boldsymbol{d}_{\text{ieq}} : \boldsymbol{v}_{\text{ieq}} \tag{7g}$$

where $\boldsymbol{x}$ are the decision variables on the upper level model, which can be either discrete or continuous ones, and $\boldsymbol{y}$ are the decision variables on the lower level model which are continuous variables; Θ is the convex feasible region of the upper level model; $\boldsymbol{u}_{\text{eq}}$, $\boldsymbol{u}_{\text{ieq}}$, $\boldsymbol{v}_{\text{eq}}$, and $\boldsymbol{v}_{\text{ieq}}$ are dual variables corresponding to the constraints in the lower-level model.

It is fortunate that the lower level model is in fact a convex optimization, whose KKT condition is a sufficient and necessary condition to the original "min" model according to the strong duality theory [45], [46], which gives

$$\boldsymbol{A}_{\text{eq}} \boldsymbol{y} = \boldsymbol{b}_{\text{eq}} \tag{8a}$$

$$\boldsymbol{A}_{\text{ieq}} \boldsymbol{y} \leq \boldsymbol{b}_{\text{ieq}} \tag{8b}$$

$$\boldsymbol{B}_{\text{eq}} \boldsymbol{y} + \boldsymbol{C}_{\text{eq}} \boldsymbol{x} = \boldsymbol{d}_{\text{eq}} \tag{8c}$$

$$\boldsymbol{B}_{\text{ieq}} \boldsymbol{y} + \boldsymbol{C}_{\text{ieq}} \boldsymbol{x} \leq \boldsymbol{d}_{\text{ieq}} \tag{8d}$$

$$\boldsymbol{u}_{\text{ieq}} \leq \boldsymbol{0}, \ \boldsymbol{v}_{\text{ieq}} \leq \boldsymbol{0} \tag{8e}$$

$$\boldsymbol{a} = \boldsymbol{A}_{\text{eq}} \boldsymbol{u}_{\text{eq}} + \boldsymbol{A}_{\text{ieq}} \boldsymbol{u}_{\text{ieq}} + \boldsymbol{B}_{\text{eq}} \boldsymbol{v}_{\text{eq}} + \boldsymbol{B}_{\text{ieq}} \boldsymbol{v}_{\text{ieq}} \tag{8f}$$

$$(\boldsymbol{A}_{\text{ieq}}\boldsymbol{y} - \boldsymbol{b}_{\text{ieq}}) \perp \boldsymbol{u}_{\text{ieq}} \tag{8g}$$

$$(\boldsymbol{B}_{\text{ieq}}\boldsymbol{y} + \boldsymbol{C}_{\text{ieq}}\boldsymbol{x} - \boldsymbol{d}_{\text{ieq}}) \perp \boldsymbol{v}_{\text{ieq}} \tag{8h}$$

where "$\perp$" denotes the complementary constraints that satisfies $\boldsymbol{c}\perp\boldsymbol{d} \Leftrightarrow c_i d_i = 0$, *for each component*. Furthermore, these complementary constraints can be exactly linearized with respect to the big M theory by introducing some dummy binary variables $\boldsymbol{sa}$ and $\boldsymbol{sb}$ as

$$\begin{cases} -M\boldsymbol{sa} \le \boldsymbol{A}_{ieq}\boldsymbol{y} - \boldsymbol{b}_{\text{ieq}} \le \boldsymbol{0} \\ -M\left(1-\boldsymbol{sa}\right) \le \boldsymbol{u}_{\text{ieq}} \le \boldsymbol{0} \end{cases}, \boldsymbol{sa} \in \{0,1\} \tag{9}$$

$$\begin{cases} -M\boldsymbol{sb} \le \boldsymbol{B}_{\text{ieq}}\boldsymbol{y} + \boldsymbol{C}_{\text{ieq}}\boldsymbol{x} - \boldsymbol{d}_{\text{ieq}} \le \boldsymbol{0} \\ -M\left(1-\boldsymbol{sb}\right) \le \boldsymbol{v}_{\text{ieq}} \le \boldsymbol{0} \end{cases}, \boldsymbol{sb} \in \{0,1\}. \tag{10}$$

The set of constraints in (9) and (10) imply that there must be one constraint that equals to 0 and the other one is nonpositive. Take (9) for illustration. Since $\boldsymbol{sa}$ is binary variables, they should take value by 1 or 0. If *sa* is 1, the first constraint becomes $\boldsymbol{A}_{\text{ieq}}\boldsymbol{y}-\boldsymbol{b}_{\text{ieq}} \le 0$ and the first constraint will show that $\boldsymbol{u}_{\text{ieq}} = 0$; otherwise, if *sa* is 0, the first constraint becomes $\boldsymbol{A}_{\text{ieq}}\boldsymbol{y}-\boldsymbol{b}_{\text{ieq}} = 0$ and the second constraint will show that $\boldsymbol{u}_{\text{ieq}} \le 0$.

Replacing the lower level model (7c)–(7g) by (8a)–(8f) as well as (9) and (10), the original bilevel model (7) can be equivalently reformulated as a single-level MILP model in as follows:

$$\max_{\boldsymbol{x},\boldsymbol{y},\boldsymbol{u}_{\text{eq}},\boldsymbol{u}_{\text{ieq}},\boldsymbol{v}_{\text{eq}},\boldsymbol{v}_{\text{ieq}}} \boldsymbol{c}^T\boldsymbol{x} \tag{11a}$$

s.t. $\boldsymbol{x} \in \Theta$

$$\boldsymbol{A}_{\text{eq}}\boldsymbol{y} = \boldsymbol{b}_{\text{eq}} \tag{11b}$$

$$\boldsymbol{B}_{\text{eq}}\boldsymbol{y} + \boldsymbol{C}_{\text{eq}}\boldsymbol{x} = \boldsymbol{d}_{\text{eq}} \tag{11c}$$

$$\boldsymbol{a} = \boldsymbol{A}_{\text{eq}}\boldsymbol{u}_{\text{eq}} + \boldsymbol{A}_{\text{ieq}}\boldsymbol{u}_{\text{ieq}} + \boldsymbol{B}_{\text{eq}}\boldsymbol{v}_{\text{eq}} + \boldsymbol{B}_{\text{ieq}}\boldsymbol{v}_{\text{ieq}} \tag{11d}$$

$$\begin{cases} -M\boldsymbol{sa} \le \boldsymbol{A}_{\text{ieq}}\boldsymbol{y} - \boldsymbol{b}_{\text{ieq}} \le \boldsymbol{0} \\ -M\left(1-\boldsymbol{sa}\right) \le \boldsymbol{u}_{\text{ieq}} \le \boldsymbol{0} \end{cases} \tag{11e}$$

$$\begin{cases} -M\boldsymbol{sb} \le \boldsymbol{B}_{\text{ieq}}\boldsymbol{y} + \boldsymbol{C}_{\text{ieq}}\boldsymbol{x} - \boldsymbol{d}_{\text{ieq}} \le \boldsymbol{0} \\ -M\left(1-\boldsymbol{sb}\right) \le \boldsymbol{v}_{\text{ieq}} \le \boldsymbol{0} \end{cases} \tag{11f}$$

$$\boldsymbol{sa} \in \{0,1\}, \boldsymbol{sb} \in \{0,1\} \tag{11g}$$

In general, the MILP problems can be efficiently handled by some well-known algorithms, such as branch-and-bound, cutting plane, *etc*. Moreover, these algorithms have been strengthened and implemented in some off-on-shell commercial solvers like CPLEX, GUROBI, and MOSEK, which are flexible, parallel-processing and high-performance. In this article, we employ these solvers to deal with the proposed model (11) to find the optimal solution.

IV. Numerical Results

In this section, two test systems with 6 and 32 breakers are studied to evaluate the proposed method. All the experiments are conducted on a work station with 4 cores and 16 GB RAM. The experiment is implemented in MATLAB and solved by a commercial CPLEX 12.6 solver.

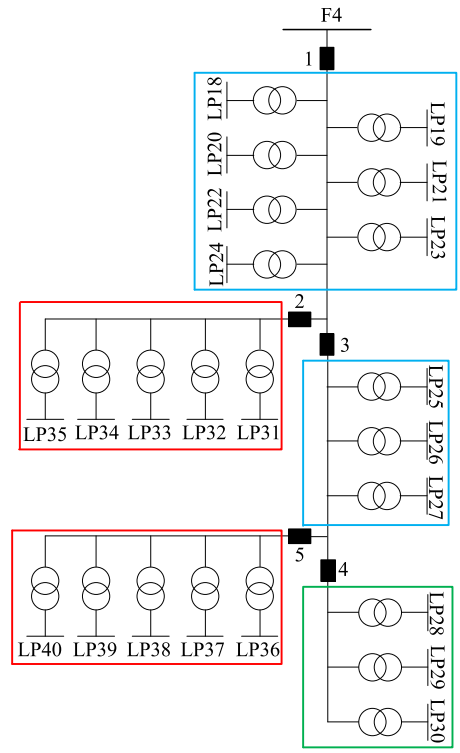

Fig. 2. Topology of the six-zone test system.

TABLE II
Parameters of Breakers' F.O.R and Load Demand

		F1	F2	F3	F4	F5
S1	Breaker F.O.R	0.05	0.003	0.01	0.04	0.02
S2		0.05	0.001	0.02	0.10	0.20
S3		0.05	0.001	0.02	0.20	0.05
S4		0.05	0.003	0.01	0.04	0.06
S5		0.05	0.10	0.01	0.06	0.02
S6		0.05	0.10	0.02	0.04	0.07
All Scenarios	Load (kW)	L1	L2	L3	L4	L5
		160	60	100	80	90

A. Test System With Six Zones

This system includes 24 buses, 23 load sites, and 5 circuit breakers. The total load demand is 490 kW and the topology is illustrated in Fig. 2, where the distribution network can be partitioned into five zones by the five circuit breakers, leading to a new compact graph. In this graph, there are totally five *N*-1 contingencies and we have $\boldsymbol{\Lambda}(\boldsymbol{\xi}_1) = \{1,2,3,4,5\}$, $\boldsymbol{\Lambda}(\boldsymbol{\xi}_2) = \{2\}$, $\boldsymbol{\Lambda}(\boldsymbol{\xi}_3) = \{3,4,5\}$, $\boldsymbol{\Lambda}(\boldsymbol{\xi}_4) = \{4\}$, and $\boldsymbol{\Lambda}(\boldsymbol{\xi}_5) = \{5\}$.

At first, we consider two ESs with the capacity being 40 kW (BU1) and 70 kW (BU2), respectively. The parameters of F.O.R for each circuit breaker and load demand in each zone can be found in Table II. Here, we consider six scenarios under different F.O.R. of circuit breakers for comparison. The result of the proposed method can be observed in Table III. In contrast, there are only two ESs and five load buses, so we could totally have $5^2 = 25$ states for installing the two ESs. Thus, the enumeration method can be employed as the benchmark method to compare with the proposed method and the comparative results are shown

TABLE III
RISK ASSESSMENT BY THE PROPOSED METHOD FOR SIX SCENARIOS

	BU1	BU2	Risk
S1	Z5	Z4	20.4961
S2	Z5	Z5	21.5723
S3	Z4	Z4	19.8358
S4	Z4	Z5	20.9340
S5	Z4	Z2	20.8296
S6	Z2	Z5	23.2970

TABLE IV
RISK ASSESSMENT BY ENUMERATION METHOD FOR SIX SCENARIOS

Zone Number		Risk (kW)					
BU1	BU2	S1	S2	S3	S4	S5	S6
Z1	Z1	24.7694	38.1427	35.5597	27.0652	28.3338	31.6320
Z1	Z2	24.6101	38.1025	35.5172	26.9124	23.1355	26.6448
Z1	Z3	24.1457	37.1860	34.5499	26.4669	27.7825	30.5633
Z1	Z4	21.5727	31.9776	22.1800	23.9989	24.2985	28.3814
Z1	Z5	22.8854	25.4672	31.9457	22.6861	26.6685	26.6218
Z2	Z1	24.6632	38.1159	35.5314	26.9633	24.8683	28.3072
Z2	Z2	24.6101	38.1025	35.5172	26.9124	23.1355	26.6448
Z2	Z3	24.0395	37.1592	34.5216	26.3650	24.3169	27.2385
Z2	Z4	21.4665	31.9508	22.1517	23.8971	20.8329	25.0566
Z2	Z5	22.7792	25.4404	31.9174	22.5843	23.2030	23.2970
Z3	Z1	24.4130	37.5960	34.9827	26.7233	28.0188	31.0213
Z3	Z2	24.2537	37.5558	34.9402	26.5705	22.8204	26.0341
Z3	Z3	23.7892	36.6394	33.9729	26.1250	27.4674	29.9526
Z3	Z4	21.2162	31.4310	21.6030	23.6570	23.9834	27.7707
Z3	Z5	22.5290	24.9205	31.3687	22.3443	26.3535	26.0112
Z4	Z1	22.9427	34.6198	27.9142	25.3130	26.0279	29.7745
Z4	Z2	22.7834	34.5796	27.8717	25.1602	20.8296	24.7873
Z4	Z3	22.3189	33.6632	26.9044	24.7147	25.4766	28.7058
Z4	Z4	20.8487	30.6869	19.8358	23.3044	23.4857	27.4590
Z4	Z5	21.0587	21.9443	24.3002	20.9340	24.3626	24.7644
Z5	Z1	23.6928	30.8995	33.4946	24.5629	27.3822	28.7690
Z5	Z2	23.5336	30.8593	33.4521	24.4101	22.1839	23.7819
Z5	Z3	23.0691	29.9429	32.4848	23.9646	26.8309	27.7004
Z5	Z4	20.4961	24.7345	20.1149	21.4966	23.3469	25.5185
Z5	Z5	22.1689	21.5723	30.6246	21.2641	26.0352	24.8850
Optimal		**20.4961**	**21.5723**	**19.8358**	**20.9340**	**20.8296**	**23.2970**

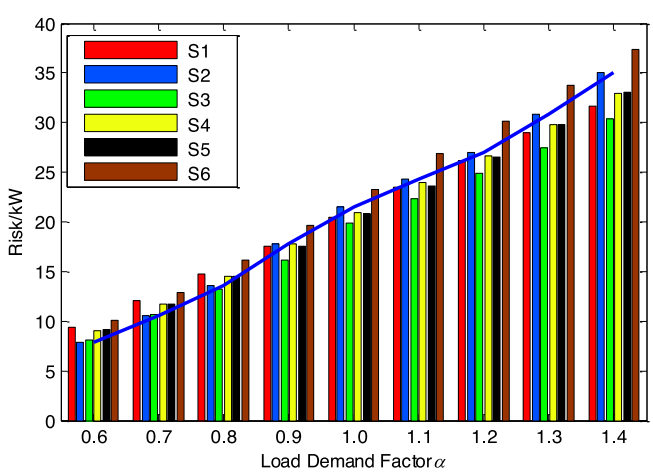

Fig. 3. Risk assessment under different load demand level.

in Table IV. By enumerating each state of ES location, the risk of the six scenarios can be directly computed by (4). It can be observed that the proposed method leads to exactly the same risk assessment results as the enumeration method, which verifies the effectiveness of the proposed method.

TABLE V
LOCATION OF ESS UNDER DIFFERENT LOAD DEMAND LEVEL

	α=0.8		α=1.0		α=1.2		α=1.4	
	BU1	BU2	BU1	BU2	BU1	BU2	BU1	BU2
S1	Z5	Z4	Z5	Z4	Z4	Z4	Z4	Z4
S2	Z4	Z5	Z5	Z5	Z5	Z5	Z5	Z5
S3	Z5	Z4	Z4	Z4	Z4	Z4	Z4	Z4
S4	Z4	Z5	Z4	Z5	Z5	Z5	Z5	Z5
S5	Z2	Z4	Z4	Z2	Z4	Z2	Z4	Z2
S6	Z2	Z5	Z5	Z2	Z5	Z2	Z5	Z2

TABLE VI
SIX CASES WITH DIFFERENT NUMBER OF ESS

	Capacity of ESs
Case1	{40; 70}
Case2	{40; 70; 30}
Case3	{40; 70; 30;50}
Case4	{40; 70; 30; 50; 20}
Case5	{40; 70; 30; 50; 20; 10}
Case6	{40; 70; 30; 50; 20; 10; 30}

Furthermore, Fig. 3 depicts the risk of the six scenarios under different load demand level. Let α be the load demand factor, defined by the ratio of the actual load demand to the basic load demand given in Table II. The results suggest that the risk will increase with the increase of the load demand level. Specifically, it takes on a piecewise linear relationship between load demand level and the risk. This is because for the same capacity of ESs (i.e., 110 kW in this article), the load loss will increase once the N-1 contingency occurs. Besides, the optimal location of ESs is presented in Table V, where the results show that the optimal location of ESs may be different under different load demand level, however, it is interesting to find that the locations of ESs always distribute in zone 2, zone 4, or zone 5. The phenomenon implies that the zones 4 and 5 are the weak areas that need the ESs to improve the system reliability and reduce the risk.

As for the computational time, the proposed method takes about 0.68 s, while the benchmark method only needs 0.24 s. This is because the number of ESs in this article is small and the number of possibilities of the location for ESs is very limited, so the enumeration method can quickly scan all the possibilities and the computational time is shorter than that of the proposed method. However, the increasing number of ESs will affect the computational time due to the increased complexity of the proposed model.

As shown in Table VI, we further consider six cases with different number and capacity of ESs. The results of allocating ESs in the distribute network can be seen in Table VII and the risk of each scenario is presented in Table VIII. Similar as before, different number of ESs and different scenarios will lead to different allocation of ESs. Moreover, with the increasing number of ESs, the risk will be significantly reduced due to the increase of total ES capacity. In addition, different scenario may have different sensitivity to the number of ESs. S2 has the largest improvement ratio from case1 to 6, whereas S1 has the smallest. This implies that the risk of S2 is more sensitive than S1 to the ESs. Another interesting observation is that the weak areas are

TABLE VII
ALLOCATION WITH DIFFERENT NUMBER OF ESS (kW)

	S1	S2	S3	S4	S5	S6
Case1	Z4: 70 Z5: 40	Z5: 110	Z4: 110	Z4: 40 Z5: 70	Z2: 70 Z4: 40	Z2: 40 Z5: 70
Case2	Z4: 70 Z5: 70	Z4: 40 Z5: 100	Z4: 100 Z5: 40	Z4: 40 Z5: 100	Z2: 70 Z4: 70	Z2: 70 Z5: 70
Case3	Z4: 90 Z5: 100	Z4: 90 Z5: 100	Z4: 90 Z5: 100	Z4: 100 Z5: 90	Z2: 70 Z4: 80 Z5: 40	Z2: 70 Z4: 30 Z5: 90
Case4	Z4: 120 Z5: 90	Z4: 90 Z5: 120	Z4: 90 Z5: 120	Z4: 120 Z5: 90	Z2: 60 Z4: 80 Z5: 70	Z2: 60 Z4: 70 Z5: 80
Case5	Z4: 90 Z5: 130	Z4: 90 Z5: 130	Z4: 90 Z5: 130	Z4: 90 Z5: 130	Z2: 60 Z4: 80 Z5: 80	Z2: 60 Z4: 70 Z5: 90
Case6	Z4: 140 Z5: 110	Z4: 140 Z5: 110	Z4: 140 Z5: 110	Z4: 140 Z5: 110	Z2: 60 Z4: 100 Z5: 90	Z2: 60 Z4: 100 Z5: 90

TABLE VIII
RISK UNDER SIX CASES WITH DIFFERENT NUMBER OF ESS

	S1	S2	S3	S4	S5	S6
Case1	20.4961	21.5723	19.8358	20.9340	20.8296	23.2970
Case2	18.2958	17.1287	16.7989	18.2613	17.8690	20.4535
Case3	14.8011	11.7069	12.3573	14.1970	14.2889	15.6603
Case4	13.6943	10.7287	11.3248	13.1353	12.7545	13.7311
Case5	13.1409	10.2396	10.8085	12.6045	12.1062	12.6216
Case6	11.4807	8.7723	9.2596	11.0121	10.4796	10.6707
Ratio	43.99%	59.34%	53.22%	47.40%	49.69%	54.20%

TABLE IX
SIX CASES WITH DIFFERENT NUMBER OF ESS

	Computational time (s)		Risk	
	Proposed method	Benchmark method	Proposed method	Benchmark method
Case1	0.68	0.24	20.4961	20.4961
Case2	0.78	1.17	18.2958	18.2958
Case3	0.92	5.52	14.8011	14.8011
Case4	1.23	27.75	13.6943	13.6943
Case5	1.48	146.43	13.1409	13.1409
Case6	2.66	749.92	11.4807	11.4807

still among Z2, Z4, and Z5 for the six cases under different six scenarios.

In addition, the comparison of the computational time and effectiveness between the proposed method and benchmark method are presented in Table IX, where it can be observed that both the proposed method and the benchmark method achieve the same risk, but the computational speed of the proposed method is much faster than the benchmark method, especially when the number of ESs becomes larger. This is because the benchmark method enumerates all the possibilities, the number of which will exponentially increases. In contrast, the computational time of the proposed method increases slowly. This indicates that the proposed method can be more suitable for large-scale problems.

Finally, the MIP gaps of the proposed method for six scenarios are shown in Table X. It indicates that the MIP gaps for all the scenarios can be reduced to zero after only a limited number of iterations. Therein, case 3 needs seven iterations while case 6 needs only three iterations. The zero gap suggests that the global optimal solution of the proposed bilevel optimization model can always be found.

TABLE X
MIP GAPS OF THE PROPOSED METHOD FOR SIX SCENARIOS

Iterations	S1	S2	S3	S4	S5	S6
1	---	---	---	---	---	---
2	---	---	---	---	11.63%	---
3	8.39%	6.90%	38.87%	3.32%	1.86%	0.00%
4	0.91%	0.00%	6.94%	1.79%	1.85%	
5	0.00%		5.63%	0.00%	0.00%	
6			5.63%			
7			0.00%			

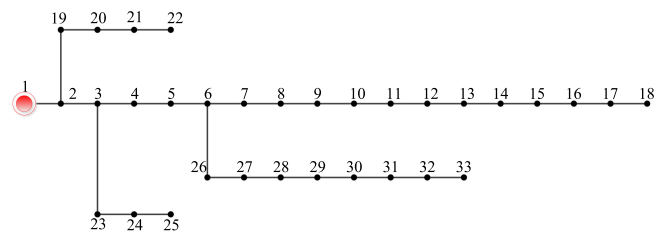

Fig. 4. Risk assessment under different load demand level.

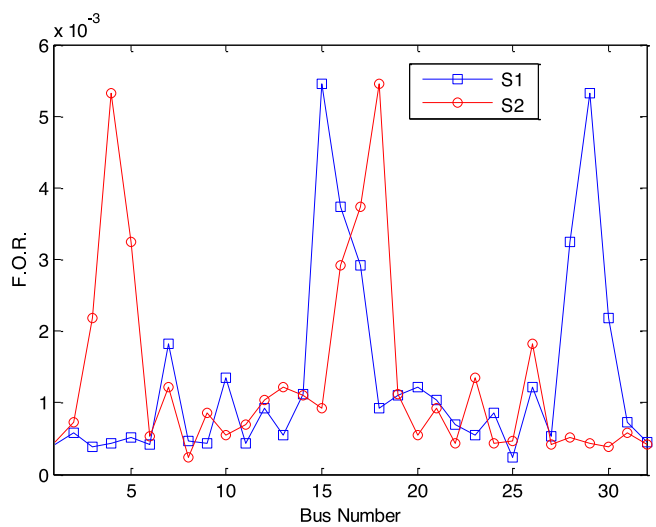

Fig. 5. Risk assessment under different breakers' F.O.R.

B. Test System With 33 Zones

To verify our conclusion from the small-scale test case, we carry out experiment on another test system includes 33 buses, 32 load sites and 32 branches, each branch being with one breaker [47]. The total load demand is 3715 kW and the topology is presented in Fig. 4. The F.O.R of the breakers is plotted in Fig. 5, where we consider two scenarios under different F.O.R. of circuit breakers for comparison, denoted as S1 and S2. At the beginning, four ESs are chosen with the capacities of 10, 20, 30, and 40 kW, respectively. Let β be the ES capacity factor, defined by the ratio of the actual ES capacity to the basic ES capacity given.

The risk is depicted in Fig. 6, which suggests that the risk will be reduced with the increase of the ES capacity, since the ESs

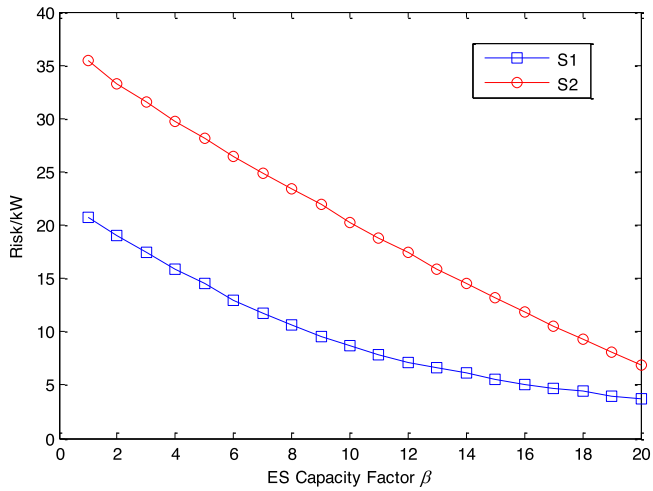

Fig. 6. Risk assessment under different capacity of ESs.

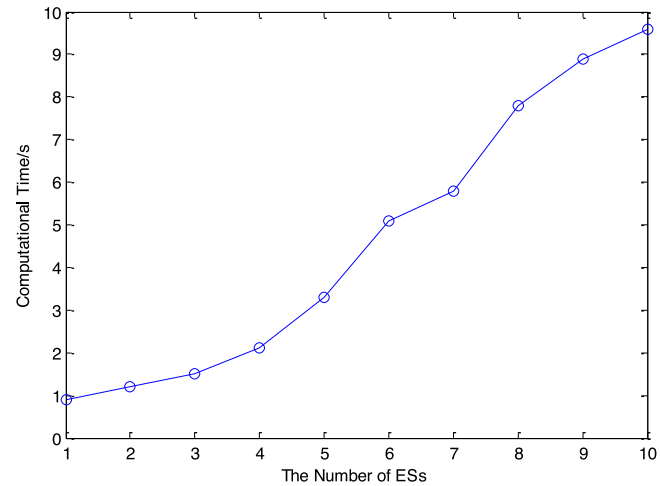

Fig. 7. Relationship of computational time and the number of ESs.

TABLE XI
LOCATION OF ESS UNDER DIFFERENT LOAD DEMAND LEVEL

β	S1				S2			
	BU1	BU2	BU3	BU4	BU1	BU2	BU3	BU4
1	Z18	Z18	Z18	Z18	Z18	Z18	Z18	Z18
2	Z18	Z33	Z17	Z18	Z18	Z18	Z18	Z18
4	Z18	Z33	Z18	Z33	Z18	Z18	Z18	Z18
6	Z32	Z31	Z18	Z33	Z32	Z33	Z15	Z18
8	Z18	Z18	Z31	Z33	Z33	Z15	Z33	Z18
10	Z31	Z32	Z33	Z18	Z33	Z14	Z18	Z33
12	Z30	Z31	Z33	Z18	Z33	Z18	Z17	Z32
14	Z31	Z13	Z18	Z33	Z13	Z33	Z18	Z32

will mitigate the load loss after the N-1 contingency happens. Meanwhile, the risk of S1 is always smaller than that of S2 and both curves takes on an exponential relationship between ES capacity and the risk. At the beginning, the risk is reduced sharply, but with the increase of the ES capacity, the decrease of the risk is slow down gradually.

In particular, the proposed model suggests that when β is greater than 42, there is no load loss after N-1 contingencies under both scenarios. Besides, the optimal location of ESs is presented in Table XI, where the results show that the optimal location of ESs may be different under different scenario, but the locations of ESs distributes are always near to bus 18, bus 33, and bus 13, which are the weak areas. Moreover, it can be observed that different ES capacity factor will lead to different location of ESs. When β is small, the ESs are expected to be installed in bus 18, while β becomes larger, the location of ESs are expected to be at buses 13, 18, and 33.

Besides, the computational performance is compared under different number of ESs integrated in the system. Fig. 7 depicts that the computing time increases with the increasing number of ESs due to the increasing number of decision variables in the proposed optimization model, but this computing speed is still very fast. It is desired to note that the benchmark method needs 33^n to find the optimal solution, where n is the number of ESs.

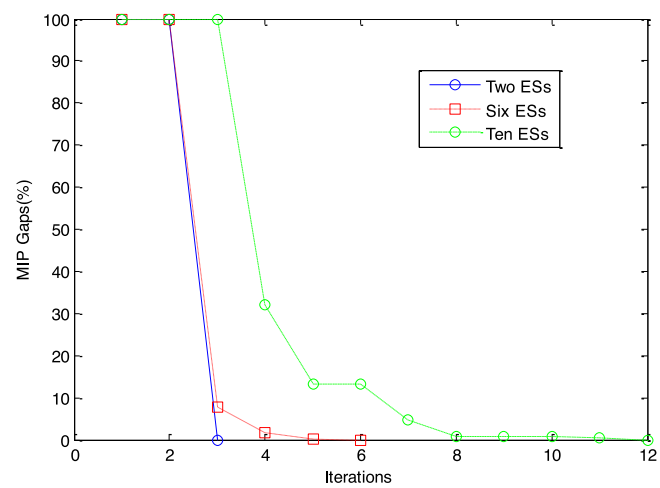

Fig. 8. MIP gaps under different numbers of ESs.

When n is large, the computer fails to solve the problem using benchmark method.

Finally, the MIP gaps under different numbers of ESs are depicted in Fig. 8. For convenience, we choose 2, 6, and 10 ESs for illustration. The results in Fig. 8 show that the gaps under all scenarios can be reduced to zero after limited number of iterations. Moreover, it can be observed that the number of iterations will slightly increase with increasing the number of ESs.

V. CONCLUSION

In this article, optimal allocation strategy of ESs was studied to reduce the risk of N-1 contingencies, since the N-1 contingencies are the most common threats in the distribution networks. Specifically, a bilevel optimization model was proposed to obtain the optimal decision for determining the location of the given number of ESs, which can be further reformulated as a single-level model using KKT conditions. The simulation results on two test systems showed that the proposed model can achieve

the same optimal decision as the enumeration method while the computation complex can be significantly reduced. Moreover, it was indicated that the location of ESs are usually installed on the weak areas and different scenarios including load demand level, ES capacity and breakers' F.O.R will lead to different optimal solutions. Therefore, how to address the uncertainties in the proposed model will be studied in our future works.

References

[1] M. S. Guney and Y. Tepe, "Classification and assessment of energy storage systems," *Renew. Sustain. Energy Rev.*, vol. 75, pp. 1187–1197, 2017.

[2] S. R. Deeba, R. Sharma, T. K. Saha, D. Chakraborty, and A. Thomas, "Evaluation of technical and financial benefits of battery-based energy storage systems in distribution networks," *IET Renew. Power Gener.*, vol. 10, no. 8, pp. 1149–1160, 2016.

[3] A. S. A. Awad, J. D. Fuller, T. H. M. E.-. Fouly, and M. M. A. Salama, "Impact of energy storage systems on electricity market equilibrium," *IEEE Trans. Sustain. Energy*, vol. 5, no. 3, pp. 875–885, Jul. 2014.

[4] G. Strbac *et al.*, "Opportunities for energy storage: Assessing whole-system economic benefits of energy storage in future electricity systems," *IEEE Power Energy Mag.*, vol. 15, no. 5, pp. 32–41, Sep./Oct. 2017.

[5] S. Thapa and R. Karki, "Reliability benefit of energy storage in wind integrated power system operation," *IET Gener., Trans. Distrib.*, vol. 10, no. 3, pp. 807–814, 2016.

[6] R. Sebastián, "Battery energy storage for increasing stability and reliability of an isolated wind diesel power system," *IET Renew. Power Gener.*, vol. 11, no. 2, pp. 296–303, 2017.

[7] Y. Xu and C. Singh, "Power system reliability impact of energy storage integration with intelligent operation strategy," *IEEE Trans. Smart Grid*, vol. 5, no. 2, pp. 1129–1137, Mar. 2014.

[8] Q. Fu, A. Nasiri, V. Bhavaraju, A. Solanki, T. Abdallah, and D. C. Yu, "Transition management of microgrids with high penetration of renewable energy," *IEEE Trans. Smart Grid*, vol. 5, no. 2, pp. 539–549, Mar. 2014.

[9] B. Cleary, A. Duffy, A. OConnor, M. Conlon, and V. Fthenakis, "Assessing the economic benefits of compressed air energy storage for mitigating wind curtailment," *IEEE Trans. Sustain. Energy*, vol. 6, no. 3, pp. 1021–1028, Jul. 2015.

[10] M. N. Kabir, Y. Mishra, G. Ledwich, Z. Y. Dong, and K. P. Wong, "Coordinated control of grid-connected photovoltaic reactive power and battery energy storage systems to improve the voltage profile of a residential distribution feeder," *IEEE Trans. Ind. Inform.*, vol. 10, no. 2, pp. 967–977, May 2014.

[11] A. Nieto, V. Vita, and T. I. Maris, "Power quality improvement in power grids with the integration of energy storage systems," *Int. J. Eng. Res. Technol.*, vol. 5, no. 7, pp. 438–443, 2016.

[12] A. K. Srivastava, A. A. Kumar, and N. N. Schulz, "Impact of distributed generations with energy storage devices on the electric grid," *IEEE Syst. J.*, vol. 6, no. 1, pp. 110–117, Mar. 2012.

[13] K. Heussen, S. Koch, A. Ulbig, and G. Andersson, "Unified system-level modeling of intermittent renewable energy sources and energy storage for power system operation," *IEEE Syst. J.*, vol. 6, no. 1, pp. 140–151, Mar. 2012.

[14] S. W. Mohod and M. V. Aware, "Micro wind power generator with battery energy storage for critical load," *IEEE Syst. J.*, vol. 6, no. 1, pp. 118–125, Mar. 2012.

[15] A. Mondal, S. Misra, and M. S. Obaidat, "Distributed home energy management system with storage in smart grid using game theory," *IEEE Syst. J.*, vol. 11, no. 3, pp. 1857–1866, Sep. 2017.

[16] M. D. Mufti, S. J. Iqbal, S. A. Lone, and Q. Ain, "Supervisory adaptive predictive control scheme for supercapacitor energy storage system," *IEEE Syst. J.*, vol. 9, no. 3, pp. 1020–1030, Sep. 2015.

[17] Z. Xu, A. Julius, and J. H. Chow, "Energy storage controller synthesis for power systems with temporal logic specifications," *IEEE Syst. J.*, vol. 13, no. 1, pp. 748–759, Mar. 2019.

[18] M. Zidar, P. S. Georgilakis, N. D. Hatziargyriou, T. Capuder, and D. Škrlec, "Review of energy storage allocation in power distribution networks: Applications, methods and future research," *IET Gener., Trans. Distrib.*, vol. 10, no. 3, pp. 645–652, 2016.

[19] V. Kalkhambkar, R. Kumar, and R. Bhakar, "Joint optimal allocation methodology for renewable distributed generation and energy storage for economic benefits," *IET Renew. Power Gener.*, vol. 10, no. 9, pp. 1422–1429, 2016.

[20] E. Nasrolahpour, S. J. Kazempour, H. Zareipour, and W. D. Rosehart, "Strategic sizing of energy storage facilities in electricity markets," *IEEE Trans. Sustain. Energy*, vol. 7, no. 4, pp. 1462–1472, Oct. 2016.

[21] S. X. Chen, H. B. Gooi, and M. Q. Wang, "Sizing of energy storage for microgrids," *IEEE Trans. Smart Grid*, vol. 3, no. 1, pp. 142–151, Mar. 2012.

[22] D. Wu, M. Kintner-Meyer, T. Yang, and P. Balducci, "Analytical sizing methods for behind-the-meter battery storage," *J. Energy Storage*, vol. 12, pp. 297–304, 2017.

[23] M. Ghofrani, A. Arabali, M. Etezadi-Amoli, and M. S. Fadali, "A framework for optimal placement of energy storage units within a power system with high wind penetration," *IEEE Trans. Sustain. Energy*, vol. 4, no. 2, pp. 434–442, Apr. 2013.

[24] L. Zheng, W. Hu, Q. Lu, and Y. Min, "Optimal energy storage system allocation and operation for improving wind power penetration," *IET Gener., Trans. Distrib.*, vol. 9, no. 16, pp. 2672–2678, 2015.

[25] D. B. W. Abeywardana, B. Hredzak, V. G. Agelidis, and G. D. Demetriades, "Supercapacitor sizing method for energy-controlled filter-based hybrid energy storage systems," *IEEE Trans. Power Electron.*, vol. 32, no. 2, pp. 1626–1637, Feb. 2017.

[26] O. Babacan, W. Torre, and J. Kleissl, "Siting and sizing of distributed energy storage to mitigate voltage impact by solar PV in distribution systems," *Sol. Energy*, vol. 146, pp. 199–208, 2017.

[27] J. Lei and Q. Gong, "Operating strategy and optimal allocation of large-scale VRB energy storage system in active distribution networks for solar/wind power applications," *IET Gener., Trans. Distrib.*, vol. 11, no. 9, pp. 2403–2411, 2017.

[28] V. Knap, S. K. Chaudhary, D. I. Stroe, M. Swierczynski, B. I. Craciun, and R. Teodorescu, "Sizing of an energy storage system for grid inertial response and primary frequency reserve," *IEEE Trans. Power Syst.*, vol. 31, no. 5, pp. 3447–3456, Sep. 2016.

[29] Y. Liu, W. Du, L. Xiao, H. Wang, S. Bu, and J. Cao, "Sizing a hybrid energy storage system for maintaining power balance of an isolated system with high penetration of wind generation," *IEEE Trans. Power Syst.*, vol. 31, no. 4, pp. 3267–3275, Jul. 2016.

[30] H. Bludszuweit and J. A. Dominguez-Navarro, "A probabilistic method for energy storage sizing based on wind power forecast uncertainty," *IEEE Trans. Power Syst.*, vol. 26, no. 3, pp. 1651–1658, Aug. 2011.

[31] F. Zhang, Z. Xu, and K. Meng, "Optimal sizing of substation-scale energy storage station considering seasonal variations in wind energy," *IET Gener., Trans. Distrib.*, vol. 10, no. 13, pp. 3241–3250, 2016.

[32] H. V. Haghi and S. Lotfifard, "Spatiotemporal modeling of wind generation for optimal energy storage sizing," *IEEE Trans. Sustain. Energy*, vol. 6, no. 1, pp. 113–121, Jan. 2015.

[33] L. F. Grisales, A. Grajales, O. D. Montoya, R. A. Hincapie, M. Granada, and C. A. Castro, "Optimal location, sizing and operation of energy storage in distribution systems using multi-objective approach," *IEEE Latin Amer. Trans.*, vol. 15, no. 6, pp. 1084–1090, Jun. 2017.

[34] M. Nick, R. Cherkaoui, and M. Paolone, "Optimal allocation of dispersed energy storage systems in active distribution networks for energy balance and grid support," *IEEE Trans. Power Syst.*, vol. 29, no. 5, pp. 2300–2310, Sep. 2014.

[35] J. Mitra, "Reliability-Based sizing of backup storage," *IEEE Trans. Power Syst.*, vol. 25, no. 2, pp. 1198–1199, May 2010.

[36] Y. Zhang, S. Zhu, and A. A. Chowdhury, "Reliability modeling and control schemes of composite energy storage and wind generation system with adequate transmission upgrades," *IEEE Trans. Sustain. Energy*, vol. 2, no. 4, pp. 520–526, Oct. 2011.

[37] J. Mitra and M. R. Vallem, "Determination of storage required to meet reliability guarantees on island-capable microgrids with intermittent sources," *IEEE Trans. Power Syst.*, vol. 27, no. 4, pp. 2360–2367, Nov. 2012.

[38] S. Bahramirad, W. Reder, and A. Khodaei, "Reliability-Constrained optimal sizing of energy storage system in a microgrid," *IEEE Trans. Smart Grid*, vol. 3, no. 4, pp. 2056–2062, Dec. 2012.

[39] R. Billinton and R. Allan, *Reliability Evaluation of Power Systems*, 1st ed., London, U.K.: Pitman Publishing Limited, 1984.

[40] Z. Bie, P. Zhang, G. Li, B. Hua, M. Meehan, and X. Wang, "Reliability evaluation of active distribution systems including microgrids," *IEEE Trans. Power Syst.*, vol. 27, no. 4, pp. 2342–2350, Nov. 2012.

[41] Y. Chen, Y. Zheng, F. Luo, J. Wen, and Z. Xu, "Reliability evaluation of distribution systems with mobile energy storage systems," *IET Renew. Power Gener.*, vol. 10, no. 10, pp. 1562–1569, 2016.
[42] W. Li and R. Billiton, *Reliability Assessment of Electric Power Systems Using Monte Carlo Methods*. New York, NY, USA: Springer, 2013.
[43] L. L. Garver, "Effective load carrying capability of generating units," *IEEE Trans. Power App. Syst.*, vol. PAS-85, no. 8, pp. 910–919, Aug. 1966.
[44] P. M. Subcommittee, "IEEE reliability test system," *IEEE Trans. Power App. Syst.*, vol. PAS-98, no. 6, pp. 2047–2054, Nov. 1979.
[45] T. Ding *et al.*, "Bi-level linear programming based interval optimization for SCED in the presence of wind power uncertainty," in *Proc. IEEE PES Gen. Meeting Conf. Expo.*, 2015, pp. 1–5.
[46] T. Ding *et al.*, "A bi-level optimization model for risk assessment and contingency ranking in transmission system reliability evaluation," *IEEE Trans. Power Syst.*, vol. 32, no. 5, pp. 3803–3813, Sep. 2017.
[47] T. Ding, X. Li, F. Li, and H. Sun, "Interval radial power flow using extended distflow formulation and krawczyk iteration method with sparse approximate inverse preconditioner," *IET Gener., Trans. Distrib.*, vol. 9, no. 14, pp. 1998–2006, 2015.

Tao Ding (Senior Member, IEEE) received the B.S.E.E. and M.S.E.E. degrees from Southeast University, Nanjing, China, in 2009 and 2012, respectively, and the Ph.D. degree from Tsinghua University, Beijing, China, in 2015.

During 2013 and 2014, he was a Visiting Scholar with the Department of Electrical Engineering and Computer Science, University of Tennessee, Knoxville, TN, USA. During 2019 and 2020, he was a Visiting Scholar of the Robert W. Galvin Center for Electricity Innovation at Illinois Institute of Technology, Chicago, IL, United States. He is currently a Professor with the State Key Laboratory of Electrical Insulation and Power Equipment, the School of Electrical Engineering, Xi'an Jiaotong University, Xi'an, China. His current research interests include electricity markets, power system economics and optimization methods, and power system planning and reliability evaluation.

Dr. Ding is an Editor for the IEEE TRANSACTIONS ON POWER SYSTEMS, IEEE POWER ENGINEERING LETTERS, IET GENERATION TRANSMISSION AND DISTRIBUTION and the Chinese Society for Electrical Engineering *Journal of Power and Energy Systems*.

Chunzhu Li (Student Member, IEEE) received the B.S. degree in 2017. From the School of Electrical Engineering, Xi'an Jiaotong University, Xi'an, China, where is currently working toward the M.S. degree.

His major research interests include power system optimization and renewable energy integration.

Xiyuan Liu (Student Member, IEEE) received the B.S. degree in 2014 from the School of Electrical Engineering, Xi'an Jiaotong University, Jinan, China, where she is currently working toward the Ph.D. degree.

Her major research interests include power system optimization and renewable energy integration.

Haipeng Xie (Student Member, IEEE) received the B.S. degree in 2014 from the School of Electrical Engineering, Xi'an Jiaotong University, Jinan, China, where is currently working toward the Ph.D. degree.

His major research interests include power system optimization and renewable energy integration.

Yufei Tang (Member, IEEE) received the Ph.D. degree in electrical engineering from the University of Rhode Island, Kingston, RI, USA, in 2016.

He is currently an Assistant Professor with the Department of CEECS and a Faculty Fellow of I-SENSE, Florida Atlantic University (FAU), Boca Raton, FL, USA, where he is also the Director of the Intelligent and Resilient Systems Research Group. His research interests include computational intelligence including machine learning, networked data mining, and cyber-physical systems, including the IoT, smart grids, and critical infrastructure systems.

Can Huang (Senior Member, IEEE) received the B.S.E.E degree from Hohai University, Nanjing, China, in 2008, the M.S.E.E. degree from Southeast University, Nanjing, China, in 2011, and the Ph.D. degree in electrical engineering from the University of Tennessee, Knoxville, TN, USA, in 2016.

He is currently a Research Staff with Lawrence Livermore National Laboratory, Livermore, CA, USA. His current research interests include smart sensors, data analytics, and machine learning for energy and power systems, cyber-physical systems, and Internet of Things.